EIB EASY system

In the case of conventional installation, devices such as switches and lamps have a fixed allocation in a room due to their connection to the mains current. The electric circuit runs to the lamp via the switch and the switch supplies the full power for the lamp. If the customer wishes this to be altered, the installation has to be rewired.

This is no problem with the EIB EASY system, as switches in this system do not have a fixed allocation or fixed wiring to certain lamps. All EIB EASY devices are connected to each other via a 2-wire bus cable. The bus cable provides the power supply, allowing information to be exchanged between the Easy devices. The EIB EASY system is based on the INSTABUS EIB, which was a great market success. The EIB EASY devices are compatible with the INSTABUS EIB. They are easier to operate, as no external programming software is required.

The centrepiece of the EIB EASY system is the basic unit. It contains an integrated power supply for generating bus voltage for up to 64 EIB EASY bus devices. The unit has an 8-gang switching actuator for switching eight users. With integrated 4-channel timer and scene function for 4 actuators.

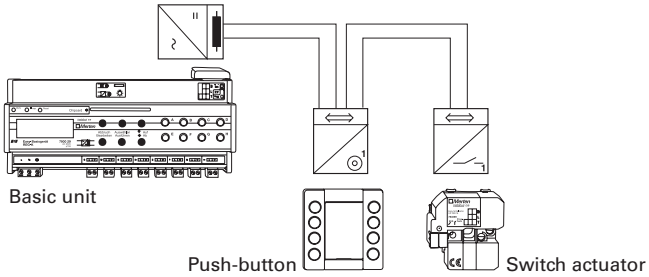

All bus-compatible EIB EASY installation devices, including the basic unit, sensors and actuators, are connected to the 2-wire bus cable.

Sensors such as push-buttons, motion sensors and binary inputs absorb information and transmit it as information via the bus.

Actuators receive the information and put it into action, e.g. transform it into switch, dimmer or blind signals. The bus cable leads to each EASY bus device. Sensors generally require only the bus cable. Actuators usually also need the 230/400 V mains supply to control the users. The bus cable and the mains supply are strictly separated.

Arrangement of the EIB EASY wiring

The wiring within the EIB EASY system can be arranged as a linear, star or tree structure. However, any combinations are also possible.

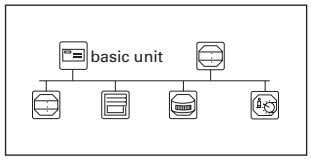

Linear structure

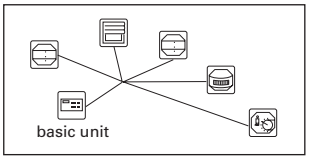

Star structure

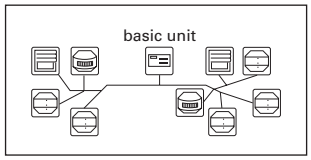

Tree structure

IMPORTANT:
Avoid earth loops!

The following limit values should be observed when laying the bus cables:

- Max. cable length between basic unit and bus user: 350 m
- Max. cable length between two bus users: 700 m
- Overall length of cables: 1000 m

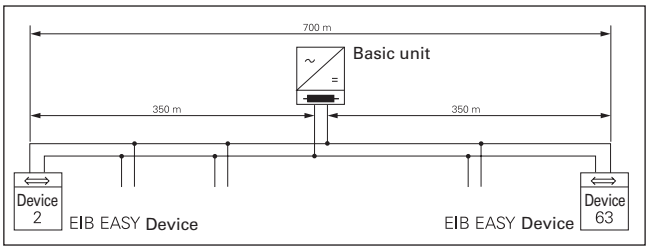

The EIB EASY devices are connected in parallel via the red/black bus cable pair using bus supply terminals. Up to four bus cable pairs (red and black) can be connected to each bus supply terminal. The bus supply terminal (Art. no. 6897 01) can also be used as a branching terminal into the terminal sockets of the switch. Attention should be paid to the correct polarisation during installation. In addition to the basic unit, up to 63 more EIB EASY devices can be connected.

Cables

The following types of cables can be used as bus cables:

Type	Installation
YCYM **2 x 2 x 0.8**	Permanent installation: in dry, damp and wet areas. Surface, flush-mounted, in pipes. Open, as long as protected from direct sunlight.
J-Y (St) Y **2 x 2 x 0.8**	Permanent installation: in dry and damp workshops, surface, flush-mounted, in pipes, open, semi-flush-mounted and flush-mounted.

Use

After installation is complete and all EIB EASY devices are connected to the bus, the essential part of the process has been completed.
By switching on the power supply of the bus on the EIB EASY basic unit, all the connected EASY devices are ready for use and are able to communicate with each other. However, they do not yet know what they actually have to do or with which EASY device they will carry out their function.

The EIB Easy basic unit recognises the actuators and sensors automatically and puts them into a list for selection. Choose the devices and device-specific functions which together are to form the new function. Then give the function a name. The connection information is then sent to the actuators and sensors. The project consists of all the functions set up in this manner.

These project data can be saved on the safety card supplied.

As well as being started via the device lists on the basic unit, the EASY system can also be activated via a simple function allocation by pressing the buttons on the terminal units.

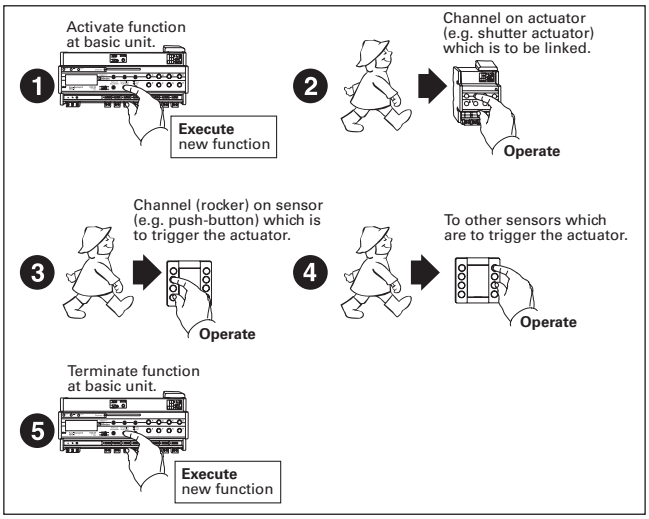

Simple to operate

Integrating devices into the functions or removing them is just as easy as creating new ones. In this way, individual/group or central functions can be created and allocated to the desired sensor channels.

These functions can be controlled easily and the function parameters, e.g. times, set via the large display and the buttons on the basic unit.

The EIB EASY basic unit also works as an 8-gang switching actuator. Eight switch channels are immediately available via manual operation. Allocating the function is clear and simple due to the buttons on the basic unit itself.

The integrated four-channel timer is also available. Additional devices are not required. The timing can be seen on the LCD.

The scene function for four actuator groups is also included. It offers the user the option of adapting the unit to suit his personal requirements.

The functions and EASY devices available are listed in the following:

Function	EIB EASY devices
Basic unit	
Switch actuator functions for 8 channels: Switch, timer switch (staircase lighting timer), load management **Time switch:** Switching, shutter, release **Scene:** Dimming	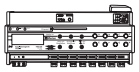 **EASY basic unit REG-K** 7900 29 Switch outputs: AC 230 V, 10 A max. 21 µF
Switch actuator	
Switch actuator functions: Switch, timer switch (staircase lighting timer), prewarning function, load management	**EASY switch actuator flush-mounted UP/230/16** 7640 99 Switch output: AC 230 V, 16 A max. 140 µF
Switch actuator functions: Switching	**EASY switch actuator REG-K/8x230/10** 7771 08 Switch output: AC 230 V, 10 A max. 21 µF
Shutter actuator	
Shutter actuator functions: Shutters up/down, safety (wind monitoring)	**EASY shutter actuator REG-K/4x(1x230)/6** 7772 04 Outputs: AC 230 V, 6 A
Dimmer actuator	
Dimmer actuator functions: Dimming, switching, timer switch (staircase lighting timer), load management	**EASY dimmer actuator REG-K/300 W** 7777 01 Output: AC 230 V, max. 300 W
Dimmer actuator functions: Dimming, switching, timer switch (staircase lighting timer), load management	**EASY dimmer actuator REG-K/400 W** 7777 02 Output: AC 230 V, max. 400 W

EIB EASY movement detectors

Function	Inserts	Design cover: ARGUS 180 flush-mounted	Design cover: Blanking cover
	System M	6243...	6621...
	System Design	6214...	6622...
	OCTOCOLOR	6215...	6620...
Movement detectors			
Detection of movement and triggering of an actuator with timer function, disconnectable movement detection, light-dependent movement detection, block function, cycle time, brightness analysis.	**EASY ARGUS 180 flush-mounted insert System Basis** 7604 19		
Detection of movement and triggering of an actuator with timer function, disconnectable movement detection, light-dependent movement detection, block function, cycle time, brightness analysis.	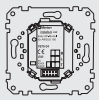 **EASY flush-mounted module for ARGUS 180** 7670 04	■	
Movement detector/switch actuator			
Movement detector functions: Detection of movement and triggering of an actuator with timer function, disconnectable movement detection, light-dependent movement detection, block function, cycle time, brightness analysis. **Switch actuator functions:** Dimming, switching, timer switch (staircase lighting timer), load management	**EASY switch actuator for ARGUS 180 flush-mounted/230/10** 7641 94 Switch output: AC 230 V, 10 A max. 140 µF	■	■

Function	Inserts	Design cover	Push-button, 1-gang	Push-button, 2-gang
		System M	6233...	6234...
		System Design	6223...	6224...
		System Basis		
		OCTOCOLOR	without status 6201... with status 6204...	without status 6202... with status 6205...
Tactile sensors				
Push-button functions: Switching, timer switching, dimming, shutter, scene, load management	**Easy flush-mounted module for push-button, 1-gang** 7670 01		■	
Push-button functions: Switching, timer switching, dimming, shutter, scene, load management	**Easy push-button insert, 1-gang** 7601 91			
Push-button functions: Switching, timer switching, dimming, shutter, scene, load management	**Easy flush-mounted module for push-button, 2-gang** 7670 02			■
Push-button functions: Switching, timer switching, dimming, shutter, scene, load management	**Easy push-button insert, 2-gang** 7601 92			
Push-button functions: Switching, timer switching, dimming, shutter, scene, load management	**Easy flush-mounted module for push-button, 4-gang** 7670 03			
Push-button functions: Switching, timer switching, dimming, shutter, scene, load management	**Easy push-button insert, 4-gang** 7601 93			
Push-button functions: Switching, timer switching, dimming, shutter, scene, load management, IR channels	**Easy flush-mounted module for multi-function push-button with IR** 7670 05			
Tactile sensor/switch actuator				
Push-button functions: Switching, timer switching, dimming, shutter, scene, load management **Switch actuator functions:** Switching	**Easy switch actuator for push-button, 1-gang UP/230/10 (flush-mounted)** 7641 91 Switch output: AC 230 V, 10 A max. 140 µF		■	
Push-button functions: Switching, timer switching, dimming, shutter, scene, load management **Switch actuator functions:** Switching	**Easy switch actuator for push-button, 2-gang UP/230/10 (flush-mounted)** 7641 92 switch output: AC 230 V, 10 A max. 140 µF			■
Push-button functions: Switching, timer switching, dimming, shutter, scene, load management **Switch actuator functions:** Switching	**Easy switch actuator for push-button, 4-gang UP/230/10 (flush-mounted)** 7641 93 Switch output: AC 230 V, 10 A max. 140 µF			
Tactile sensor/shutter actuator				
Push-button functions: Switching, dimming, shutter **Shutter functions:** Shutter up/down, slat adjustment, safety (wind monitoring)	**Easy shutter actuator for push-button, 1-gang UP/230/6 (flush-mounted)** 7642 91 Blind output: AC 230 V, 6 A		■	
Push-button functions: Switching, dimming, shutter **Shutter functions:** Shutter up/down, slat adjustment, safety (wind monitoring)	**Easy shutter actuator for push-button, 2-gang UP/230/6 (flush-mounted)** 7642 92 Blind output: AC 230 V, 6 A			■
Push-button functions: Switching, dimming, shutter **Shutter functions:** Shutter up/down, slat adjustment, safety (wind monitoring)	**Easy shutter actuator for push-button, 4-gang UP/230/6 (flush-mounted)** 7642 93 Blind output: AC 230 V, 6 A			

	Push-button, 4-gang	Multi-function push-button four-gang with IR receiver	Rocker for push-button insert one-gang	Rocker for push-button insert two-gang	Rocker for push-button insert four-gang
System M	6238...				
System Design	6226...				
System Basis		6228...	6211...	6212...	6213...
OCTOCOLOR without status	6203...				
OCTOCOLOR with status	6206...				
			■		
				■	
■					
					■
		■			
■					
■					

INSTABUS EIB system features

INSTABUS EIB comprises a two-wire bus line and the connected bus-compatible installation devices, such as sensors, actuators and system components.
Sensors record information and then send it to the bus as data telegrams. Sensors include INSTABUS push-buttons and binary inputs for connecting floating contacts.
Actuators receive the data telegrams and convert these into switching or dimming signals, for example.
System devices and components are required for the fundamental system functions. These are essentially power supplies for generating the bus voltage, couplers for connecting bus section and interfaces for connecting programming devices.

The two-wire bus line carries the power for the electronics of the bus devices and also the data. The bus line is connected to every bus device. Sensors normally only use the bus line, while actuators normally also use the 230/400 V mains supply to control the users. The bus line and mains supply are strictly separated from one another.

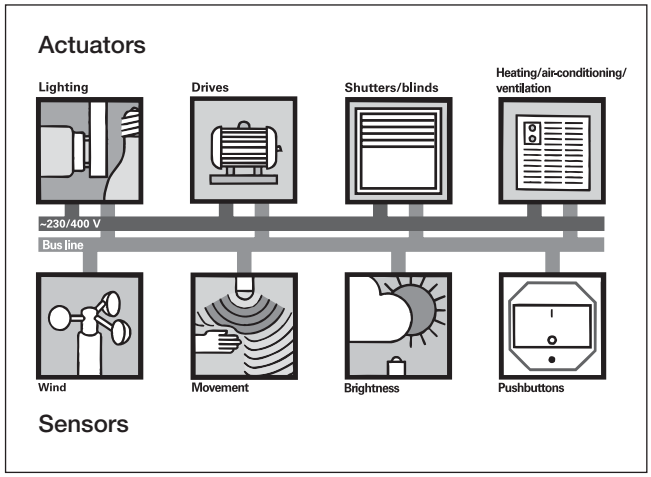

Sensors and actuators are selected in accordance with the specific application and comprise a bus coupler and application module with the corresponding application program. The application programs are part of the Merten product database and are loaded into the devices with the ETS planning and start-up software via the serial port of a PC and via the bus.

INSTABUS EIB is a decentralised bus system. Every INSTABUS device has its own micro-controller. Devices can exchange data directly in series via the bus, i.e. without communicating via the control centre. All devices are bus devices with equal rights (multi-master operation). The CSMA/CA procedure is used to avoid telegram collisions and loss of data.

INSTABUS EIB is operated with safety extra-low voltage (SELV). The bus voltage is 24 V DC (+6/–4 V). Bus devices disconnect from the bus when the voltage drops below 20 V. Data is transmitted at a speed of 9.6 kbit/s, thus making terminating resistors unnecessary.

INSTABUS EIB topology

INSTABUS EIB is subdivided into hierarchically structured sections. The line represents the smallest unit and comprises up to 64 bus devices (TLN) as well as a power supply with choke (SV). Up to 15 lines can be interconnected via line couplers (LK) which are in turn connected via a main line to create an area. In larger installations, up to 15 areas can in turn be connected via area couplers (BK) and an area line. The main and area lines also require a power supply with choke.

Over 12,000 bus devices can be connected to INSTABUS when all lines and areas are used.

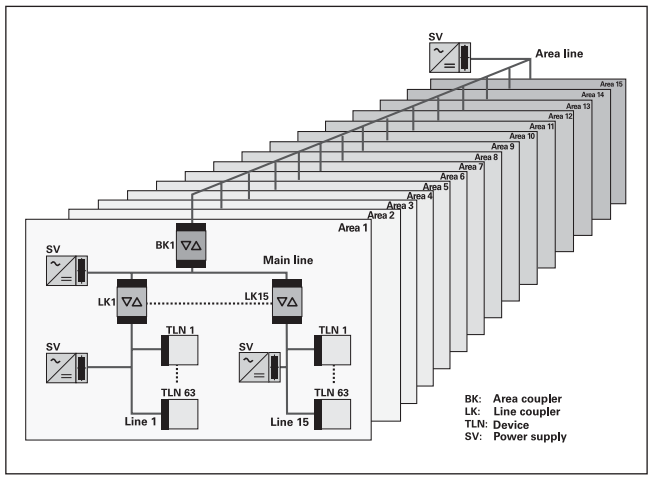

INSTABUS routing

The routing within a line can be linear, start-shaped or tree-shaped, or any combination thereof.

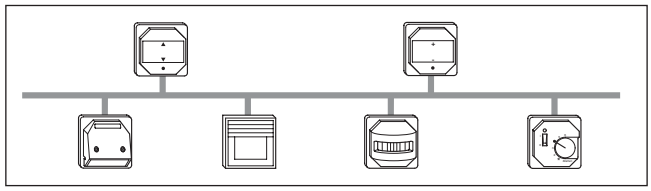

Linear structure

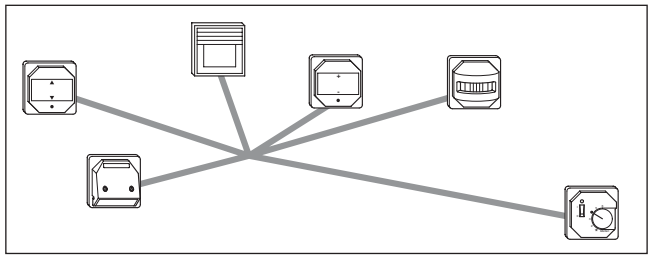

Star-structure

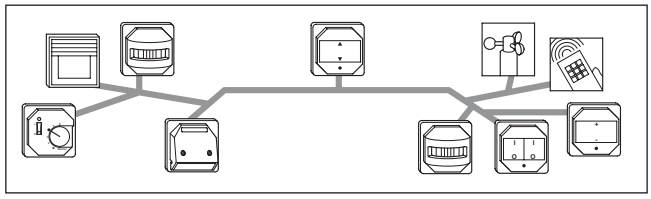

Tree-structure

The following limits must be observed when installing the bus lines:

- Max. cable length between power supply and bus device: 350 m
- Max. cable length between two bus devices: 700 m
- Overall length of cables within a line: 1000 m

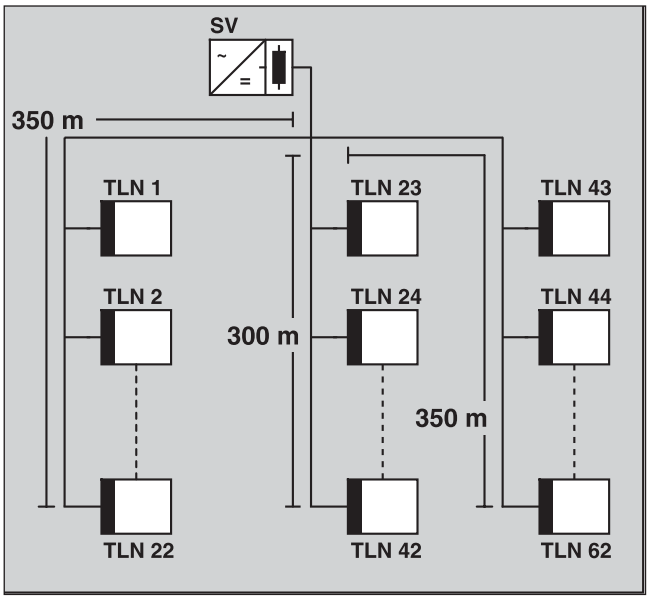

The INSTABUS EIB devices are connected in parallel via the red/black pair of wires in the bus line using bus supply terminals. Up to four pairs of bus lines (red and black) can be connected to each bus supply terminal. The bus supply terminal (Art. no. 6897 01) can also be used as a branch terminal in the switch connection boxes. Care must be taken to ensure they are connected with the correct polarity.

INSTABUS lines

The following cable types can be used as bus lines:

Type	Design	Installation
YCYM **2 x 2 x 0,8**	EIBA guideline (based on: DIN VDE 0207 and 0815) Wires red (+EIB) black (-EIB) yellow (unused) white (unused)	Permanent installation: In dry, damp and wet facilities, surface-mounted, flush-mounted, in tubing. Outdoors if protected from direct sunlight.
J-Y (St) Y **2 x 2 x 0,8** to EIB standards*	DIN VDE 0815 (based on: DIN VDE 0815) Wires red (+EIB) black (-EIB) yellow (unused) white (unused)	Permanent installation: In dry and damp facilities, surface-mounted, flush-mounted, in tubing outdoors, in and under plaster surface.

* DIN VDE 0829 specifies a test voltage of 4 kV for additional testing between the wires and outer surface of the casing in accordance with DIN VDE 0472 Part 508. A lowering of this value to 2.5 kV is anticipated within the framework of European harmonisation.

The following points should be noted if the second, unused pair of wires in the bus line is used:

- Only safety extra low voltage (SELV) is permitted
- Max. continuous current 2.5 A
  (Protection against short-circuiting and overloads required)
- Speech transmission is permissible, but not as a telephone line in the public telecommunications network
- Confusion with the wires used by INSTABUS must be impossible.

INSTABUS addresses

A distinction is made between the physical address and the group address when addressing INSTABUS devices.
The physical address is effectively the name of the bus device and is denoted by “Area . Line . Device” (e.g. 5.4.23).
The group address defines the assignment of bus devices to each other. Bus devices are always addressed via their group address(es), except for maintenance and programming. The group address comprises up to 15 main groups with a maximum of 2048 subgroups each and is denoted by “main group/subgroup” (e.g. 1/127).

INSTABUS flush-mounted devices with application interface

The insert with integrated bus coupler and application interface is located right next to the supporting ring, with which it is fastened to the flush-mounted box. Next the frame, in the chosen design, is fitted, and finally the appropriate application module.

Available INSTABUS flush-mounted inserts with application interface:

- Bus coupler UP (flush-mounted) (Art. no. 6900 99)
- Bus coupler UP 2 (flush-mounted) (Art. no. 6902 99)
- Switching actuator (flush-mounted) UP230/10 (Art. no. 6270 99)
- Series actuator (flush-mounted) UP/230/6 (Art. no. 6971 99)
- Blind actuator (flush-mounted) UP/230/6 (Art. no. 6972 99)

In addition to push-buttons, the 10-pin plug connection can also accommodate other INSTABUS application modules. For example, a movement detector or room thermostat can be connected.

Available application modules:

- Serial UP (flush-mounted) or UP 2 data interface
- PLANTEC multi-function push-button with IR receiver
- 1-gang to 4-gang push-button
- 4-gang multi-function push-button with/without IR receiver
- TRANCENT 1-gang to 4-gang electronic control
- Binary input flush-mounted 2x10
- IR receiver flush-mounted
- ARGUS 180 flush-mounted
- Information display flush-mounted
- Room thermostat flush-mounted/PI

The function of the fully installed device is ultimately determined by the software that is loaded into the insert with integrated bus coupler. Not every combination of insert and application module is permitted.

Available switch designs:

- System M (M-SMART,M-ARC,M-PLAN)
- System Design (ARTEC, TRANCENT, ANTIK)
- OCTOCOLOR

Each flush-mounted bus device with application module comprises:

1. INSTABUS flush-mounted insert
2. Frame (colour ring for OCTOCOLOR)
3. Application module
4. Application program

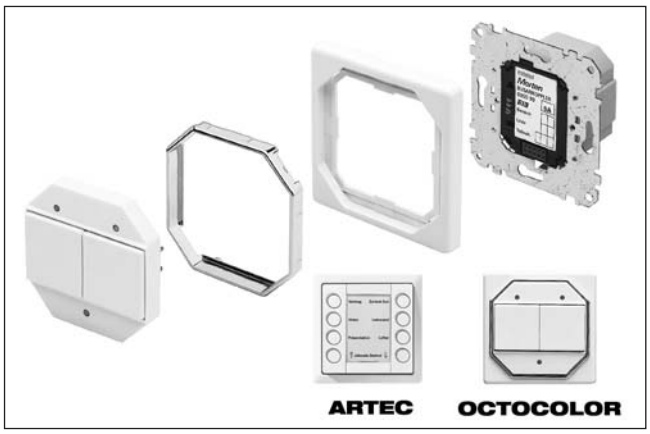

INSTABUS devices in the M1/ATELIER/EPOCA design (System Basis)

Here the INSTABUS insert comes complete with an integrated bus coupler (except for the room thermostat). The supporting ring for screw fastening is fastened to the installation box.

The physical address is programmed after connecting the bus supply terminal with push-button and LED to the back of the module. The insert and frame are then mounted on the supporting ring. The application program is loaded into the bus coupler via the bus with a programming device (e.g. PC).

Preliminary installations should be undertaken in certain phases of the construction work so that the electronics are not damaged by subsequent painting and decorating work because they are only fitted at the end.

One switch range can easily be replaced by another, e.g. EPOCA instead of M1 or vice versa.

The rockers in the chosen colour are simply snap-fitted onto the push-button inserts. Only the frames and rockers need to be replaced if you subsequently decide on a different range or colour.

From a storekeeping point of view, this modular principle minimises space requirements and therefore costs.

Each M1/EPOCA insert comprises:

1. Supporting ring
2. Frame
3. INSTABUS insert (push-button insert and rockers)
4. INSTABUS application program

   The application software is loaded into the bus coupler via the bus with a programming device (e.g. PC).

The application program defines:

- the function of the bus device
- the group address(es)
- parameter such as switching, dimming or blind control, LED functions etc.
- the priority of the telegrams sent

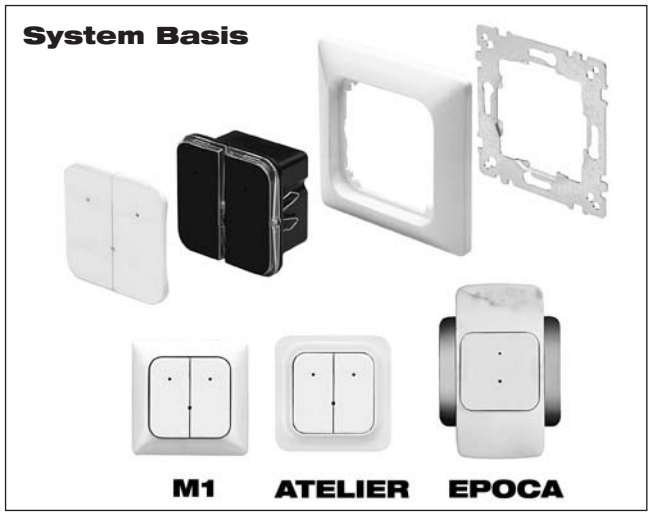

Flush-mounted installation:

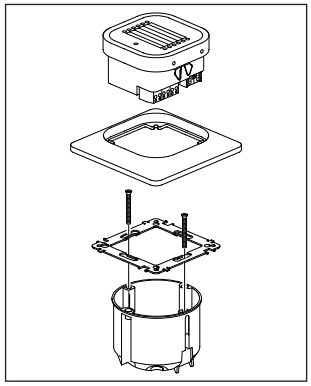

Bus connection:

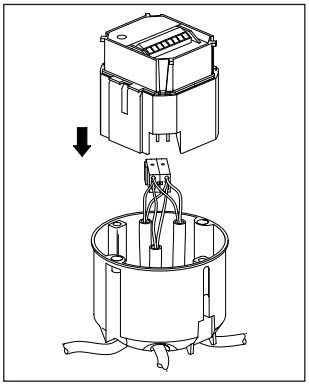

INSTABUS devices in the TRANCENT design

The flush-mounted bus coupler UP 2 (Art. no. 6902 99) is screwed onto the flush-mounted box with the supporting ring. Next the TRANCENT frame is fitted, the 1 to 4-gang electronic control (Art. no. 6231 90) snapped on, the matching cover film inserted and, finally, the glass sensor plate is screwed on.

The function of the fully installed push-button is ultimately determined by the software that is loaded into the flush-mounted bus coupler UP 2.

Each flush-mounted push-button in the TRANCENT design comprises:

1. Flush-mounted bus coupler UP 2 (Art. no. 6902 99)
2. 2-pin bus supply terminal
3. TRANCENT frame
4. 1 to 4-gang electronic control
5. Cover film
6. Glass sensor plate (transparent or satinated)
7. Application program

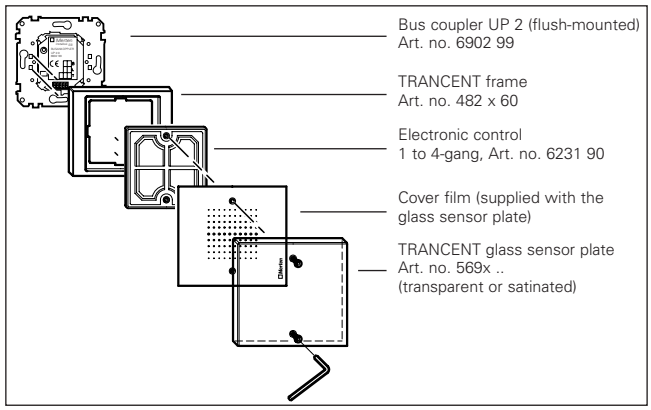

Bus coupler insert 1-gang/2-gang

Conventional rockers from the Merten switch ranges can be used with the 1-gang and 2-gang bus coupler inserts.

The 1-gang/2-gang bus coupler insert can be fastened to a 60 mm installation box with two screws or expanding claws. The device is connected via a bus supply terminal and snapped onto the bus coupler insert with the chosen switch cover and frame.

The function of the fully installed device is ultimately determined by the software.

Each flush-mounted bus device comprises:

1. 2-pin bus supply terminal
2. 1-gang or 2-gang bus coupler insert
3. Rocker from the chosen switch range
4. Frame from the chosen switch range
5. Application program for the bus coupler insert

Available switch designs:

- System M (M-SMART,M-ARC,M-PLAN)
- System Design (ARTEC,TRANCENT,ANTIK)
- System Basis (M1, ATELIER, EPOCA)
- OCTOCOLOR
- AQUA CLASSIC and anti-vandalism (PANZER) on request

Surface-mounted installation of PLANTEC devices

PLANTEC with 8 function keys and display (Art. no. 6230 14)

PLANTEC with 18 function keys and display (Art. no. 6230 24)

On both devices the bus coupler and the power supply for the display is located on the back of the unit. A 230 V auxiliary voltage (connect from above) and an INSTABUS (connect from below) in a flush-mounted double installation box are required for operation.

The supporting plate supplied with the unit is screwed onto a flush-mounted double box and earthed. Next the PLANTEC unit is snapped into place. The flush-mounted double box must be installed at right angles. A surface-mounted dismantling protector for PLANTEC devices is available as an accessory (Art. no. 6230 90).

The exploded drawings below show surface-mounted installation with dismantling protection.

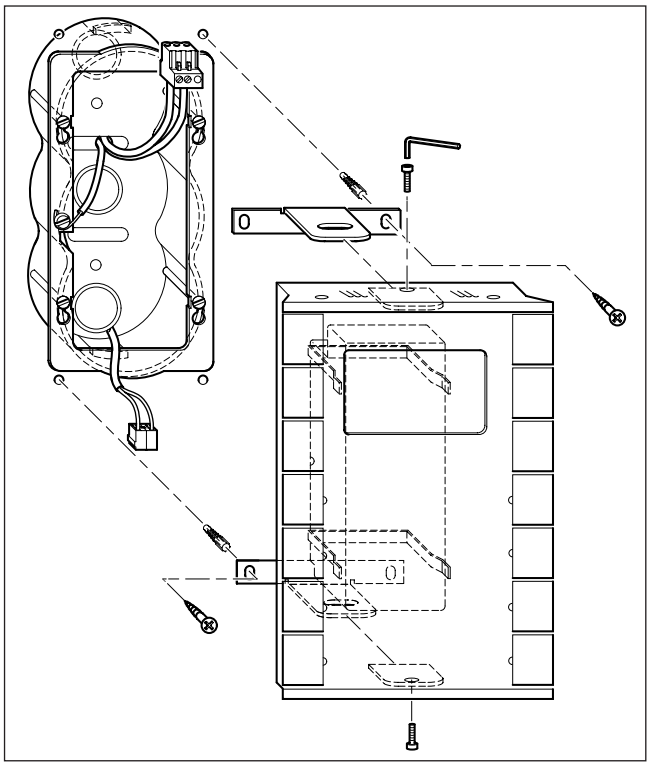

Surface-mounted installation of 6230 14 with dismantling protection 6230 90

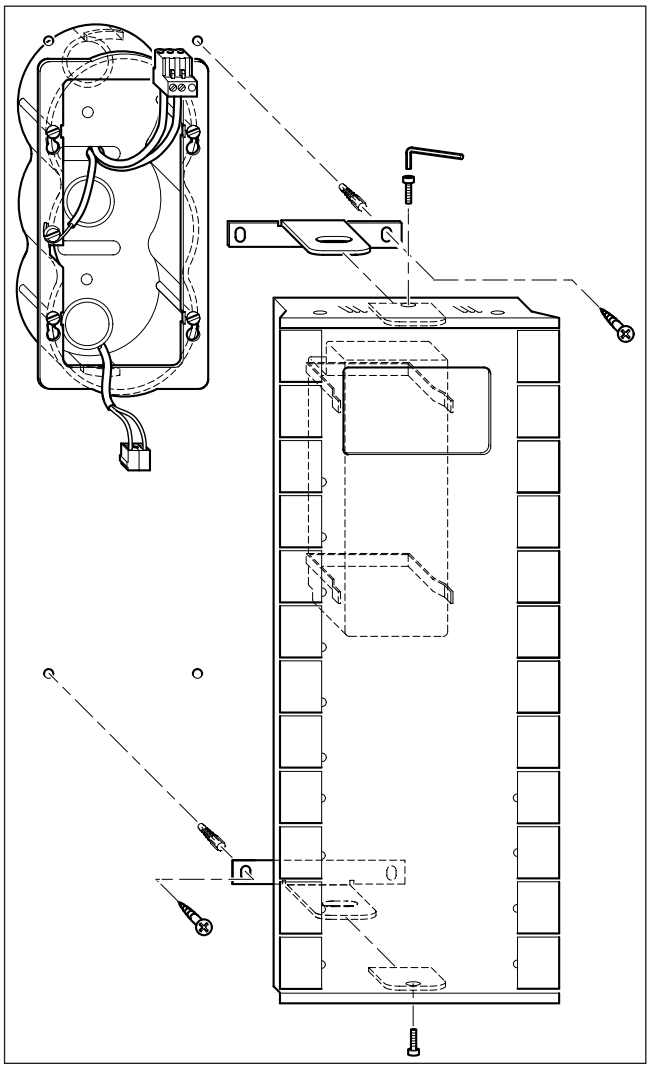

Surface-mounted installation of 6230 24 with dismantling protection 6230 90

PLANTEC multi-function push-button with IR receiver (Art. no. 6230 08)

A bus coupler UP 2 (Art. no. 6902 99) is screwed onto a flush-mounted box. The PLANTEC multi-function push-button with IR receiver is then fitted on top.

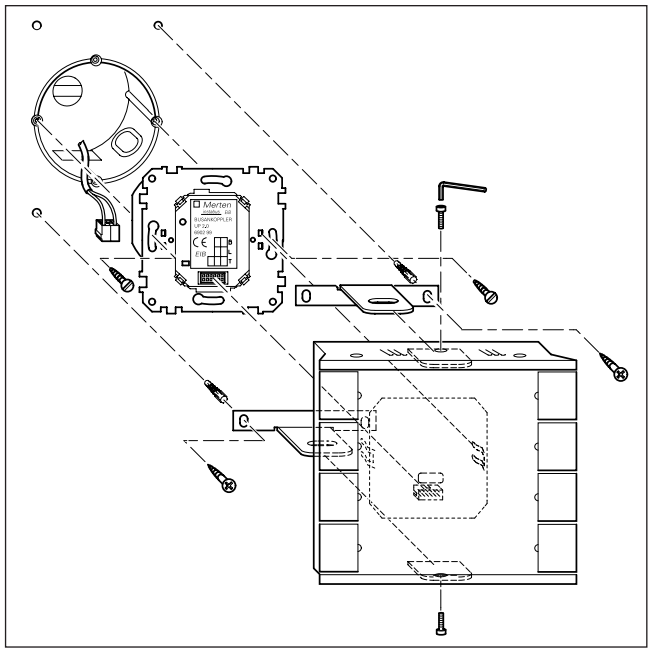

Surface-mounted installation of 6230 08 with dismantling protection 6230 90

Dimensions and drilling template for dismantling protection

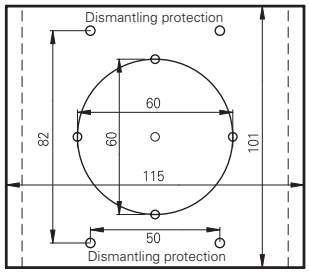

PLANTEC multi-function push-button with IR receiver (Art. no. 6230 08)

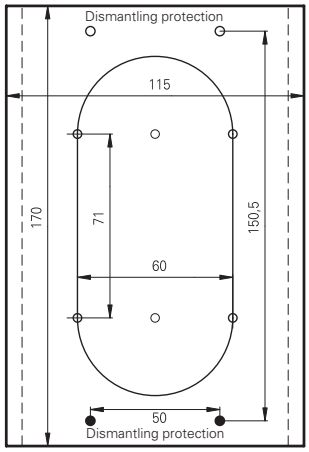

PLANTEC with 8 function keys and display (Art. no. 6230 14)

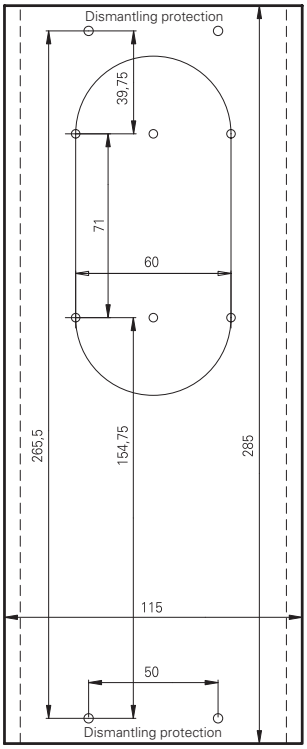

PLANTEC with 18 function keys and display (Art. no. 6230 24)

Flush-mounted installation of PLANTEC devices

If PLANTEC devices are to be installed in the wall, the flush-mounted installation box with integrated flush-mounted box (available as an accessory) must be installed in the wall at right angles so that it is flush with the plaster surface. The flush-mounted installation boxes (Art. no. 6230 98/99) for PLANTEC units with display must be earthed.

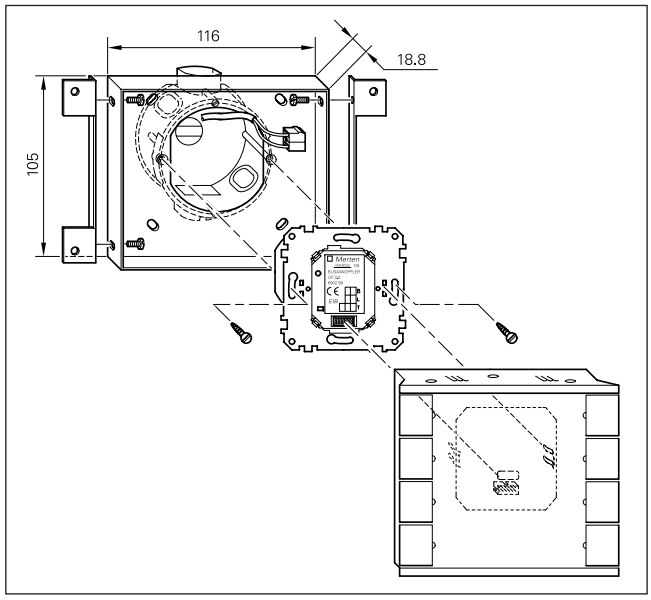

Flush-mounted installation of 6230 08 with installation box 6230 97

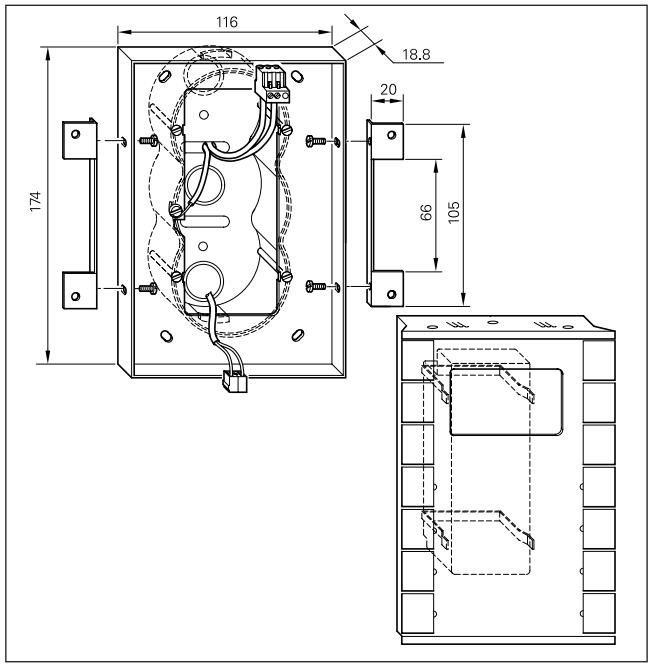

Flush-mounted installation of 6230 14 with installation box 6230 99.

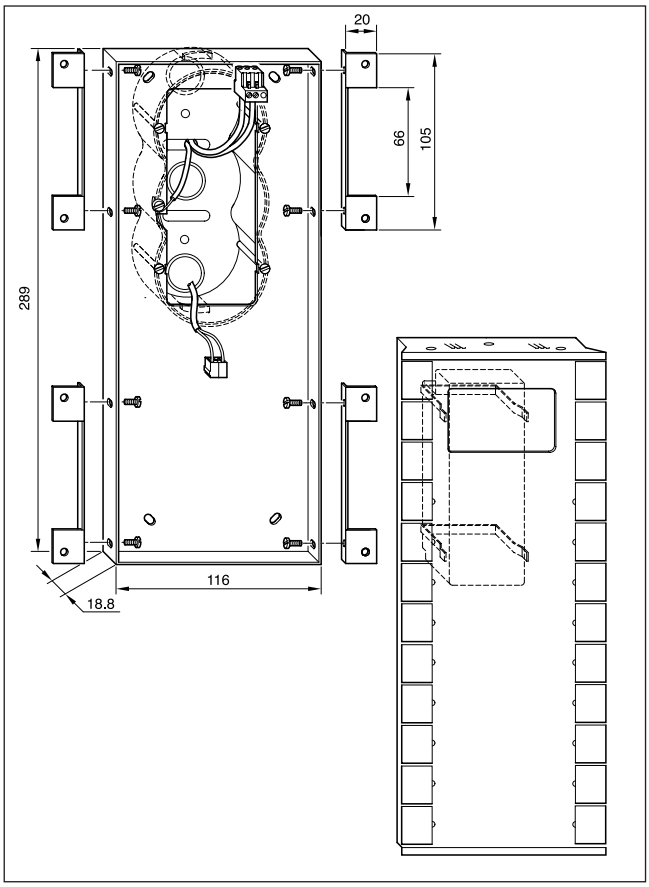

Flush-mounted installation of 6230 24 with installation box 6230 98

The installation boxes should be covered with wallpaper and then cut out with a sharp knife along the inner edge of the flush-mounted installation box.

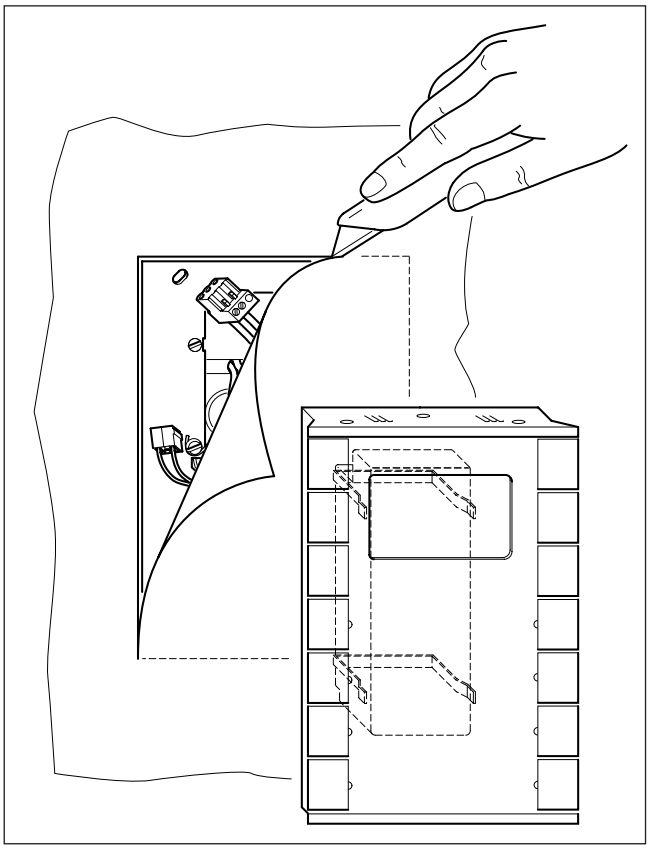

Design of surface-mounted and built-in INSTABUS devices

These devices comprise:
1. INSTABUS bus coupler
2. 2-pin bus supply terminal (for surface-mounted and built-in devices)
3. Application module
4. Application program

INSTABUS built-in series units

DIN-rail mounted units are available in the following product types:
- REG-K
- REG-S
- REG

REG-K devices

Merten has developed built-in series units for installation with bus supply terminals. This eliminates the need for data rails and connectors and at the same time allows greater flexibility in terms of installation techniques.
REG-K devices can either be mounted on DIN rails EN 50022-35x7.5 or on tall rails. They can also be combined with circuit-breakers and other switching devices on a DIN rail. Since data rails are not required, the REG-K units can also be installed in small distribution panels with a width of less than 216 mm. This is not permitted in the case of REG units with pressure contacts, since EIBA guidelines stipulate that data rails may neither be shortened or machined in any other way.
REG-K units are easy to connect and maintain. Prewiring is possible via screw-type plug-in terminals, so the units need only be fitted and connected to the bus and the 230 V cables in a matter of seconds when starting up the system.
All REG-K units are fitted with status LED's which provide an overview of the state of the devices and system at all times.

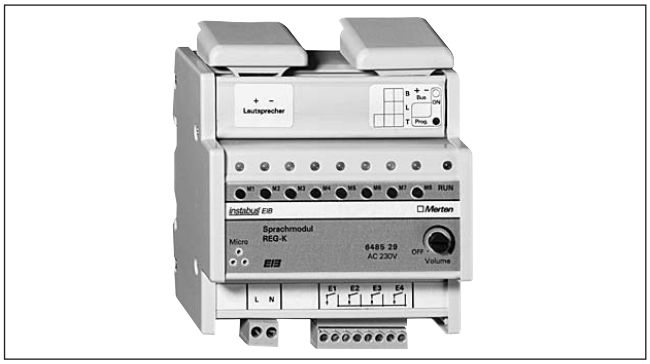

Bus connection
Open:

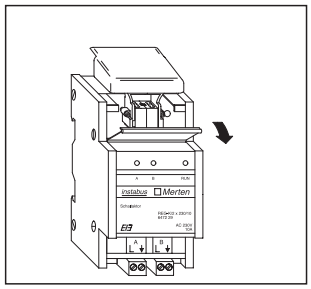

Bus connection:

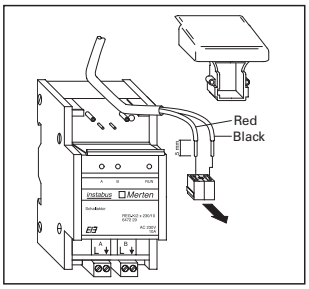

The bus is connected via the bus supply terminal included in the package. The line cover is then fitted over the bus supply terminal to ensure that a safe distance is maintained between the bus line and 230V cables.
Up to 4 pairs of wires can be connected to one bus supply terminal (stripped length: 5 mm).

Terminal and line cover
Plug in:

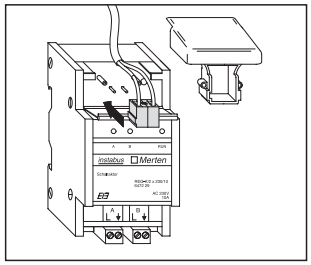

Close:

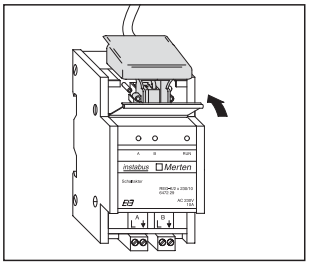

Mounting on a DIN rail

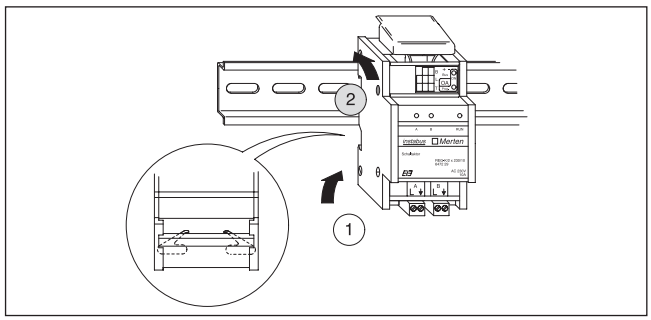

① Hook the unit onto the DIN rail from below and push it upwards (press springs together).
② Press the unit down at the top and hook it onto the rail.

Removal from a DIN rail

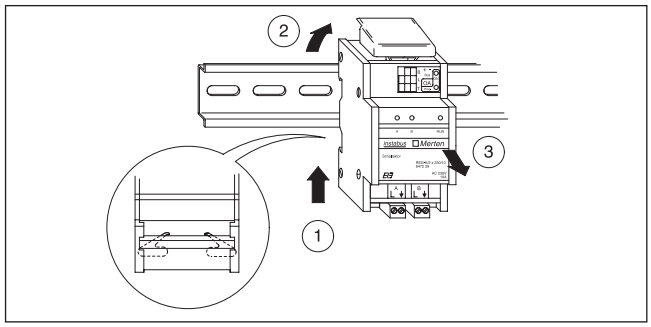

① Push unit upwards (press springs together).
② Unhook unit from the DIN rail at the top.
③ Remove unit.

Line connection
Prewiring is possible via screw-type plug-in terminals, so the units need only be fitted and connected to the bus and the 230 V cables when starting up the system.

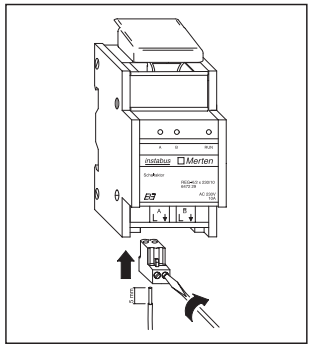

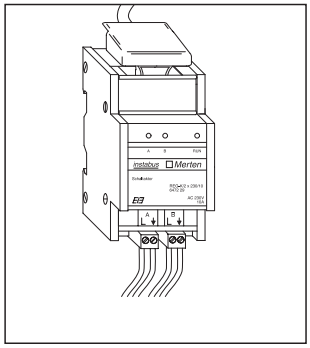

REG units

"REG" units have pressure contacts on the back which make contact with the data rail and bus when snap-fitted onto the DIN rail. "REG" units consequently always require a data rail within the DIN rail – with a data rail connector for connecting the bus line.

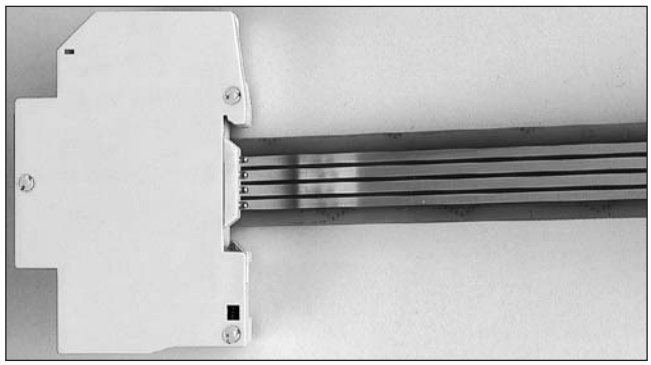

REG-S units
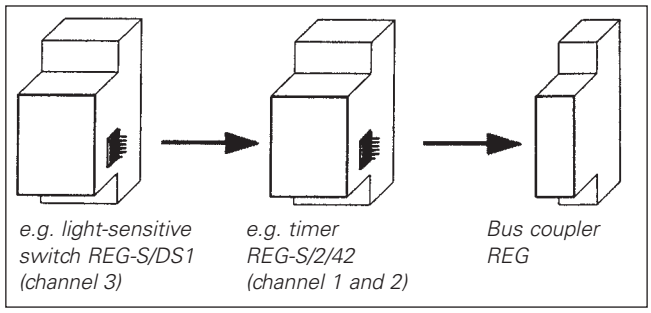
"REG-S" units do not have their own bus coupler. They have a looped application interface and are mounted on the REG bus coupler or an existing "REG-S" unit from the left. Up to four sensor channels can be connected to one REG bus coupler.